Expt.-01: Verification of the truth table of different types of primary logic gates

Theory :

The AND Gate

- The AND gate has two inputs and one output.
- Output is true only if ALL inputs are true

Input		Output
0	0	0
0	1	0
1	0	0
1	1	1

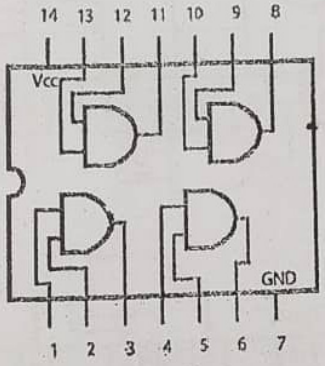

Pinout:

74LS08

OR gate:

"If either A or B is true, then Q is true".

A	B	out
0	0	0
0	1	1
1	0	1
1	1	1

Pinout:

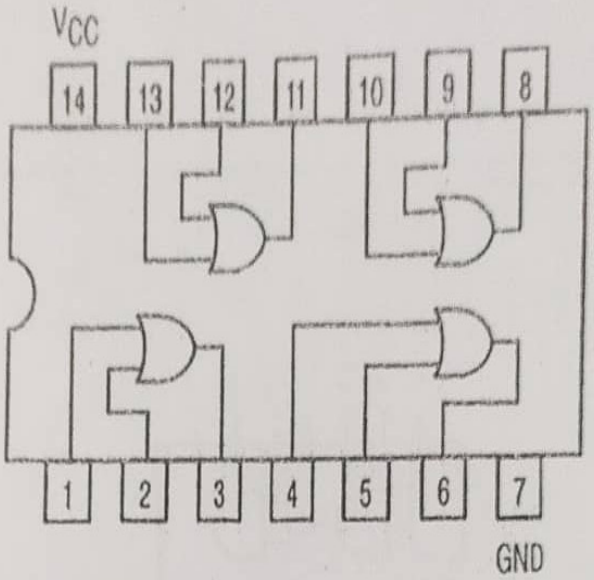

74LS32

Not Gate:

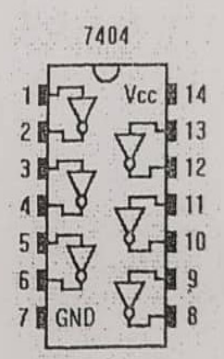

NOT gate truth table

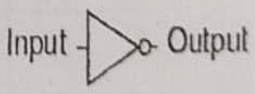

Input	Output
0	1
1	0

NAND Gate:

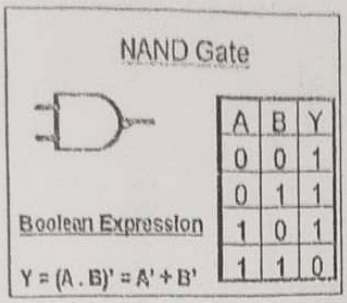

A	B	Y
0	0	1
0	1	1
1	0	1
1	1	0

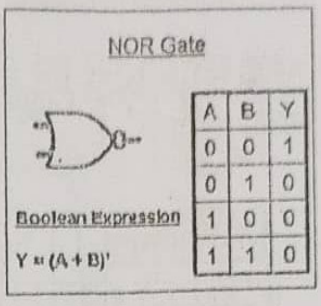

A	B	Y
0	0	1
0	1	0
1	0	0
1	1	0

Pinout:

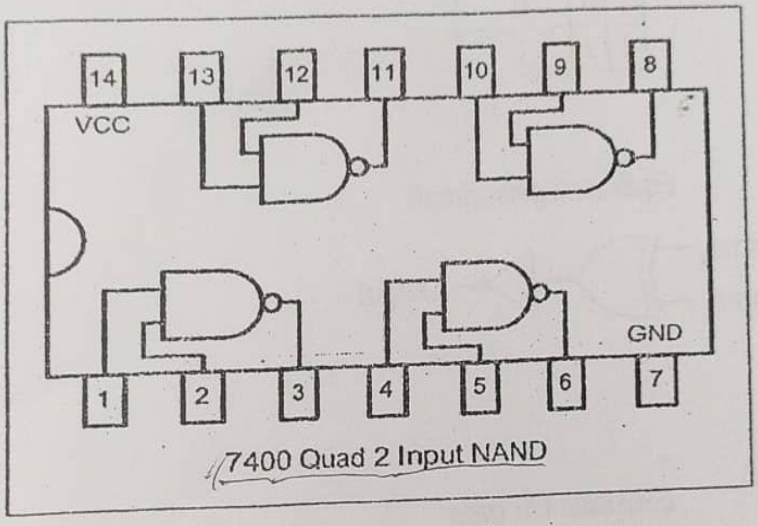

NOR Gate:

Pinout:

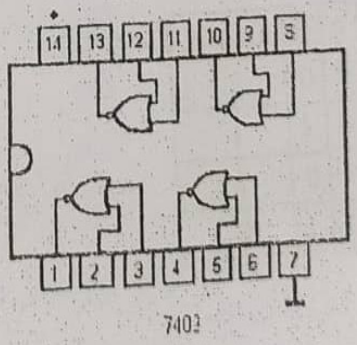

Ex-clusive OR and Ex-clusive NOR :

Exclusive-NOR gate

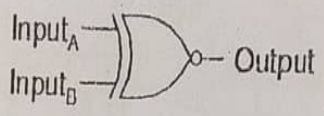

A	B	Output
0	0	1
0	1	0
1	0	0
1	1	1

Equivalent gate circuit

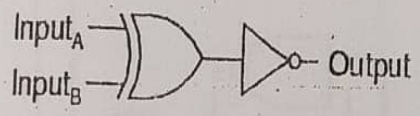

Exclusive OR Pinout :

Exclusive-OR gate

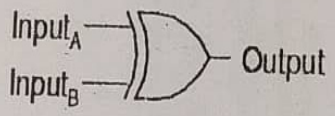

A	B	Output
0	0	0
0	1	1
1	0	1
1	1	0

Pinout

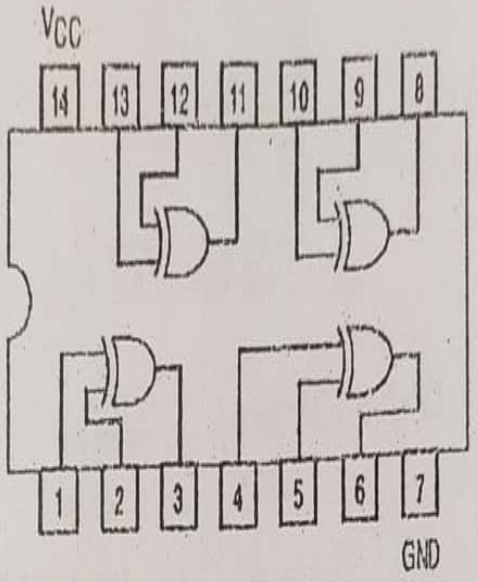

74LS86

Experiment Name: Verification of the output states of a half adder and Half Sub-tractor.

Objectives: To know the output for different input in a Half adder and Half Sub-tractor, and finding the truth table.

Apparatus Requirement:

6. Oscilloscope,
7. Breadboard,
8. Signal generator,
9. Different types of IC,
10. Connecting wire.

Half Adder: A half adder adds two one-bit binary numbers *A* and *B*. It has two outputs, *S* and *C* (the value theoretically carried on to the next addition); the final sum is 2*C* + *S*. The simplest half-adder design, pictured on the right, incorporates an XOR gate for *S* and an AND gate for *C*. Half adders cannot be used compositely, given their incapacity for a carry-in bit.

A	B	Sum	Carry
0	0	0	0
0	1	1	0
1	0	1	0
1	1	0	1

Table: Excitation table of Half Adder.

Therefore, **Sum** : $f_{Sum} = \bar{A}B + A\bar{B} = A \oplus B$

Therefore, **Carry** : $f_{Carry} = AB$

Logic diagram of a Half Adder:

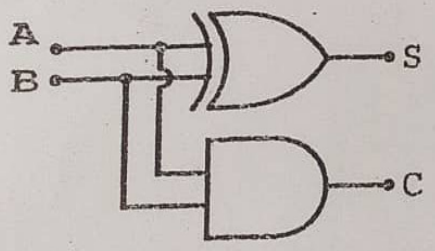

Figure: Logic diagram of a half Adder.

Half Sub-tractor: The half-sub-tractor is a combinational circuit which is used to perform subtraction of two bits. It has two inputs, X (minuend) and Y (subtrahend) and two outputs D (difference) and B (borrow).

A	B	Difference	Borrow
0	0	0	0
0	1	1	1
1	0	1	0
1	1	0	0

Table: Excitation table of Half Sub-tractor.

Therefore, **Difference** : $f_{Difference} = \bar{A}B + A\bar{B} = A \oplus B$

Therefore, **Borrow** : $f_{Borrow} = \bar{A}B$

Logic diagram of a Half Sub-tractor:

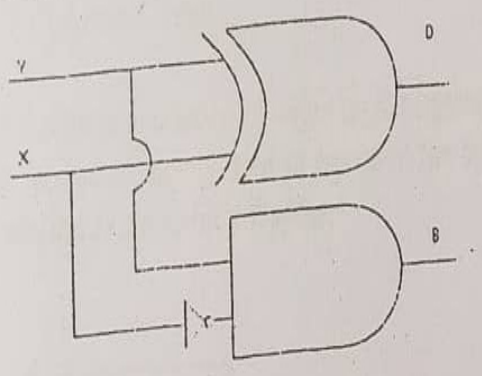

Figure: Logic diagram of a half Sub-tractor.

Full Adder

This type of adder is a little more difficult to implement than a half-adder. The main difference between a half-adder and a full-adder is that the full-adder has three inputs and two outputs. The first two inputs are A and B and the third input is an input carry designated as CIN. When a full adder logic is designed we will be able to string eight of them together to create a byte-wide adder and cascade the carry bit from one adder to the next.

The output carry is designated as COUT and the normal output is designated as S. Take a look at the truth-table.

INPUTS		OUTPUTS		
A	B	CIN	COUT	S
0	0	0	0	0
0	0	1	0	1
0	1	0	0	1
0	1	1	1	0
1	0	0	0	1
1	0	1	1	0
1	1	0	1	0
1	1	1	1	1

From the above truth-table, the full adder logic can be implemented. We can see that the output S is an EXOR between the input A and the half-adder SUM output with B and CIN inputs. We must also note that the COUT will only be true if any of the two inputs out of the three are HIGH.

Thus, we can implement a full adder circuit with the help of two half adder circuits. The first will half adder will be used to add A and B to produce a partial Sum. The second half adder logic can be used to add CIN to the Sum produced by the first half adder to get the final S output. If any of the half adder logic produces a carry, there will be an output carry. Thus, COUT will be an OR function of the half-adder Carry outputs. Take a look at the implementation of the full adder circuit shown below.

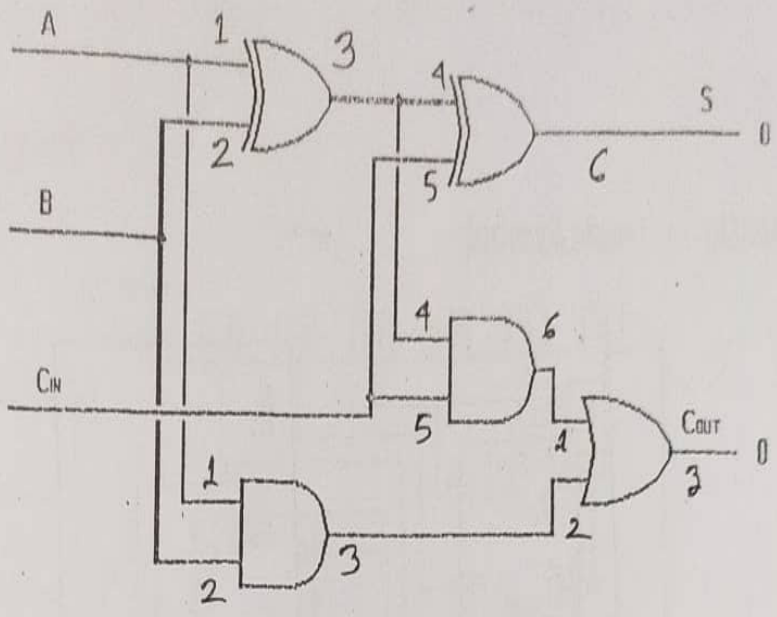

Full Adder Circuit

Though the implementation of larger logic diagrams is possible with the above full adder logic a simpler symbol is mostly used to represent the operation. Given below is a simpler schematic representation of a one-bit full adder.

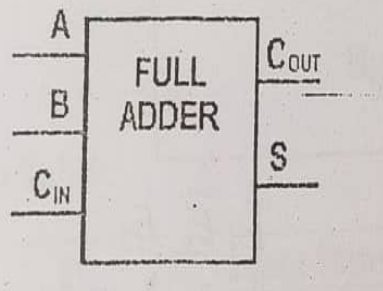

Single-bit Full Adder

With this type of symbol, we can add two bits together taking a carry from the next lower order of magnitude, and sending a carry to the next higher order of magnitude. In a computer, for a multi-bit operation, each bit must be represented by a full adder and must be added simultaneously. Thus, to add two 8-bit numbers, you will need 8 full adders which can be formed by cascading two of the 4-bit blocks. The addition of two 4-bit numbers is shown below.

Verification of the truth table of full-Subtractor.

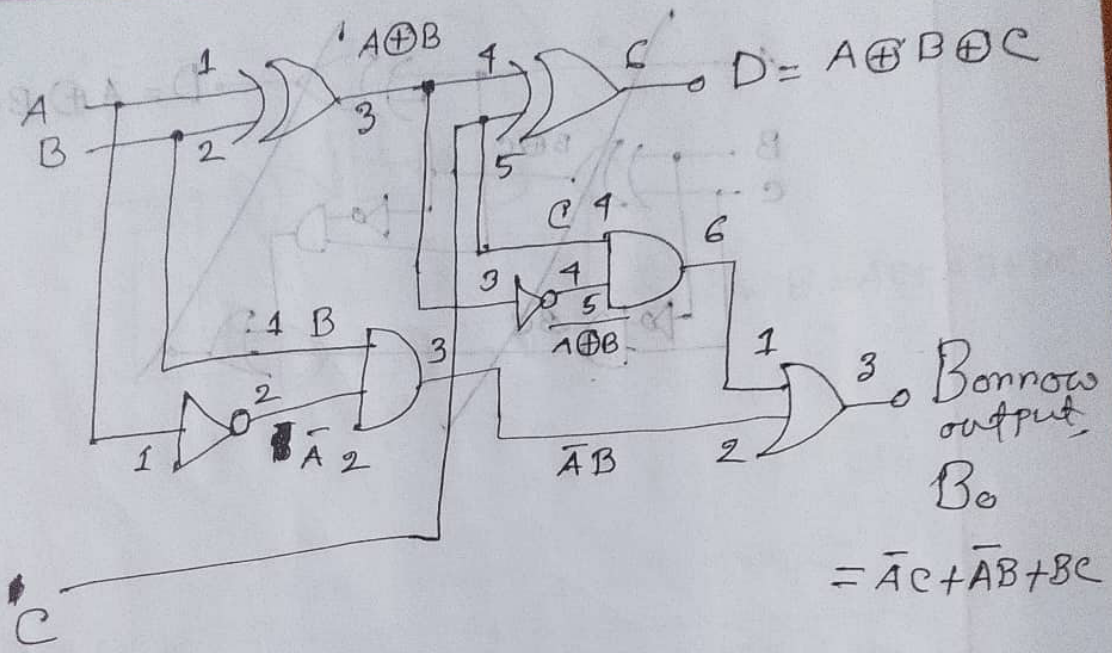

Truth Table

Input			Output	
A	B	C	D	B_o
0	0	0	0	0
0	0	1	1	1
0	1	0	1	1
0	1	1	0	1
1	0	0	1	0
1	0	1	0	0
1	1	0	0	0
1	1	1	1	1

Experiment Name: To study Demultiplexer (Binary to Decimal) and their characteristics.

Pin Configuration & Logic Symbol:

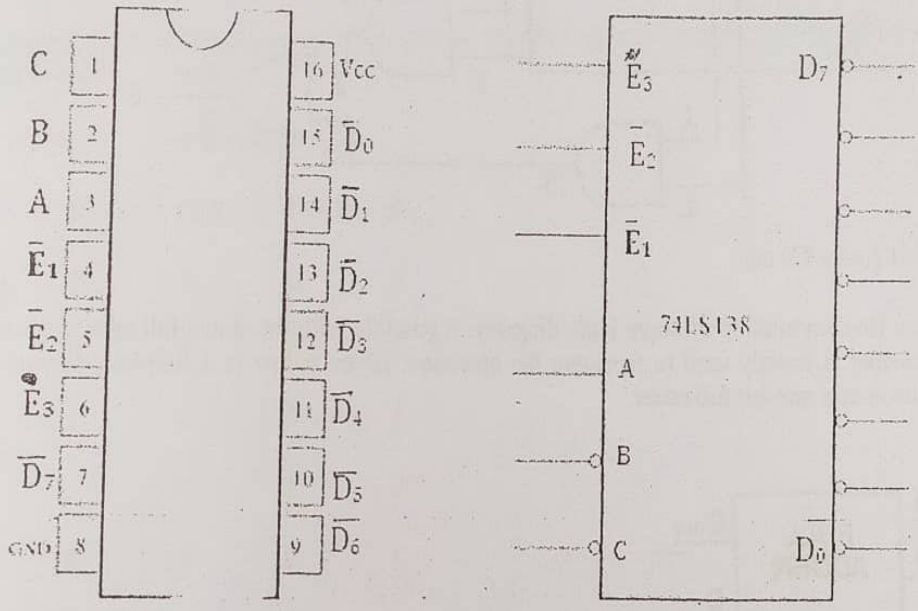

E_3 -> Active High

$\overline{E}_2$, $\overline{E}_1$ -> Active Low

$\overline{E}_1$ $\overline{E}_2$ E_3
0 0 1

Input			Output							
A	B	C	$\overline{D}_0$	$\overline{D}_1$	$\overline{D}_2$	$\overline{D}_3$	$\overline{D}_4$	$\overline{D}_5$	$\overline{D}_6$	$\overline{D}_7$
0	0	0	0	1	1	1	1	1	1	1
0	0	1	1	0	1	1	1	1	1	1
0	1	0	1	1	0	1	1	1	1	1
0	1	1	1	1	1	0	1	1	1	1
1	0	0	1	1	1	1	0	1	1	1
1	0	1	1	1	1	1	1	0	1	1
1	1	0	1	1	1	1	1	1	0	1
1	1	1	1	1	1	1	1	1	1	0

Experiment Name : To study D-type flip-flop and its characteristics.

Pin Configuration:

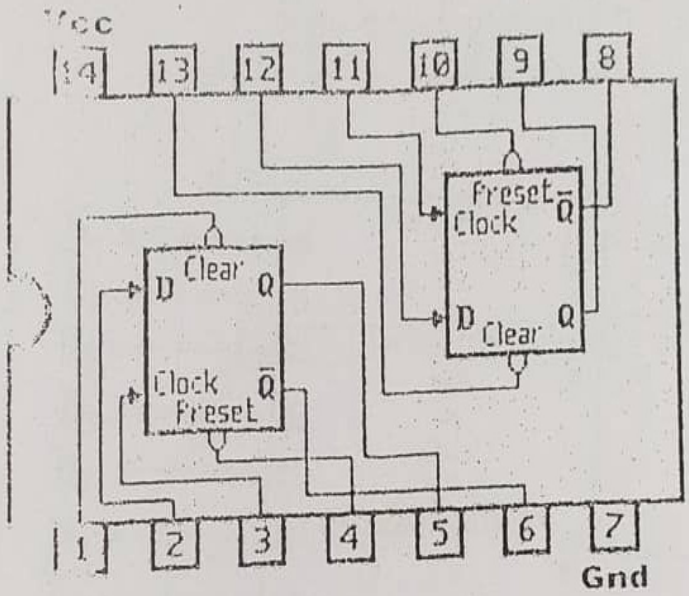

Figure: 74LS74 IC

Truth Table:

D	Present State, Q	Next State, Q`
0	0	0
0	1	0
1	0	1
1	1	1

Experiment Name: To study of SR flip-flop and its characteristics.

Pin Configuration:

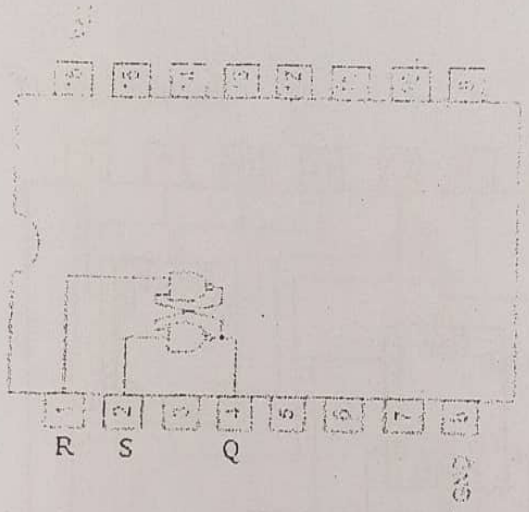

Figure: 74LS279 IC

Truth Table:

S	R	Present State, Q	Next State, Q`	comment
0	0	0	0	No change
0	0	1	1	
0	1	0	0	Reset condition
0	1	1	0	
1	0	0	1	Set condition
1	0	1	1	
1	1	0	1	Ambiguous
1	1	1	1	

Experiment : Study of Encoder (Decimal to Binary) and its characteristics ..

pin-configuration

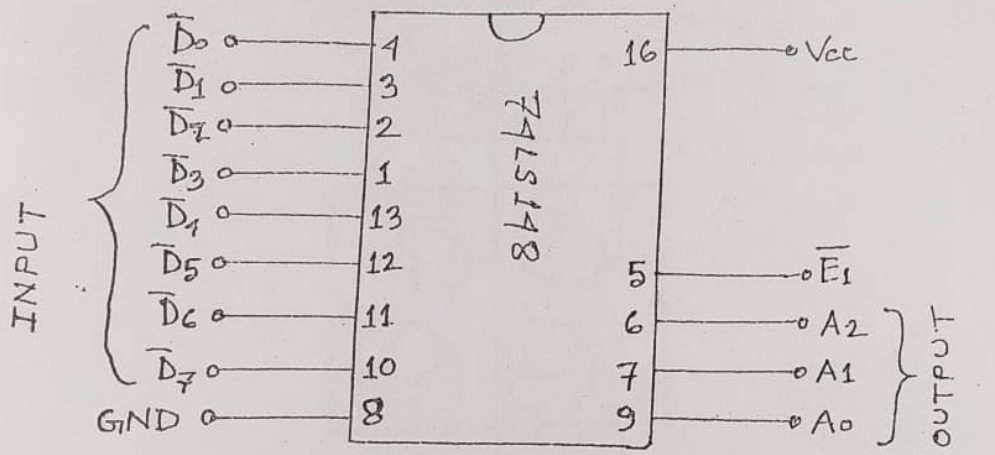

$\overline{E_1} \rightarrow 0$ (Active Low)

TRUTH TABLE

INPUT								OUTPUT		
$\overline{D_0}$	$\overline{D_1}$	$\overline{D_2}$	$\overline{D_3}$	$\overline{D_4}$	$\overline{D_5}$	$\overline{D_6}$	$\overline{D_7}$	A_2	A_1	A_0
1	0	0	0	0	0	0	0	0	0	0
0	1	0	0	0	0	0	0	0	0	1
0	0	1	0	0	0	0	0	0	1	0
0	0	0	1	0	0	0	0	0	1	1
0	0	0	0	1	0	0	0	1	0	0
0	0	0	0	0	1	0	0	1	0	1
0	0	0	0	0	0	1	0	1	1	0
0	0	0	0	0	0	0	1	1	1	1

periment : Study of Binary coded decimal Decade counter

74LS90 Divide-by-10 Counter

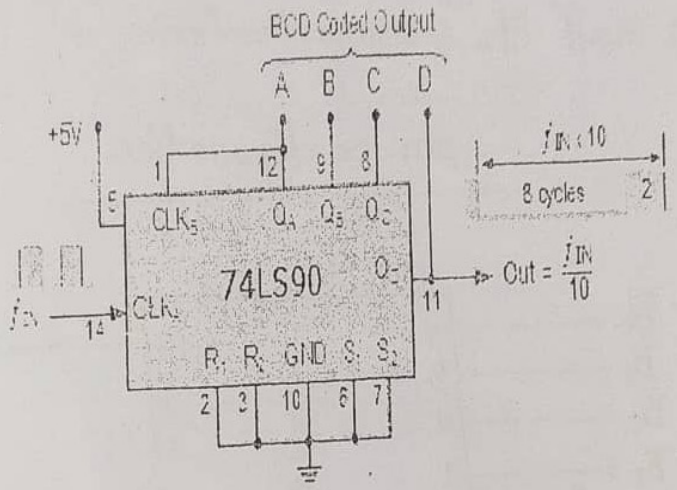
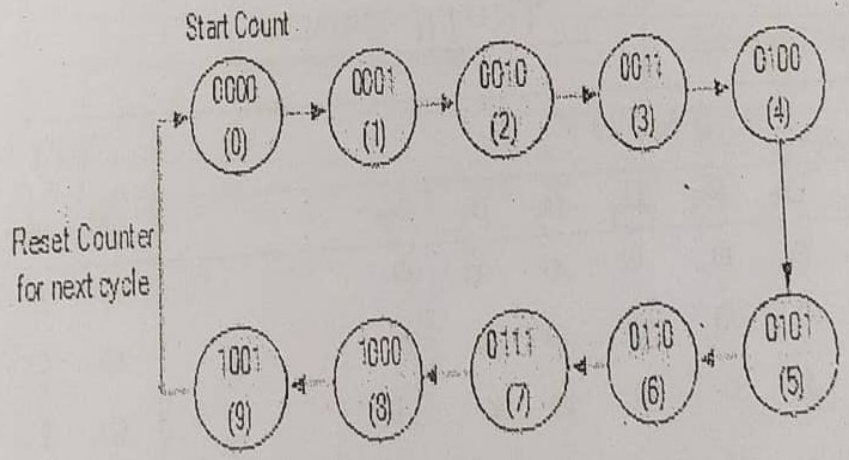
BCD Counter State Diagram